Ahlul Bayt International University

Concept and Functions in The Building Engineering

Journal homepage: https://cfbejournal.abu.ac.ir/

A Numerical Study on Response Modification Factor of Reinforced-Concrete Moment Resisting Frame Equipped with Thin Steel Plate Shear Wall

Majid Gholhaki; Ali Kheyroddin; Parisa Babaizadeh DOI :10.22034/cfbe.2026.2108721.1002
Department of Civil Engineering, Semnan University, Semnan, Iran.
*** Corresponding author:** mgholhaki@semnan.ac.ir

ARTICLE INFO

Article history:
Received: 10 May 2025
Revised: 20 August 2026
Accepted: 28 October2026
Publication: 7 November 2026

Keywords:
Steel Plate Shear Wall, Reinforced-Concrete Moment-Resisting Frame, Connections, Response Modification Factor, Thin Plate.

ABSTRACT

The steel plate shear wall (SPSW) is reckoned as an adequate lateral load-resisting system, which is being broadly used in the newly-built high-rise buildings as well as the deficient existing structures owing to its numerous advantages. This paper deals with assessing performance of the SPSW used as a secondary system combined with reinforced-concrete moment resisting frame (RCMRF) for which a novel connection (additional stirrups) is proposed. Accordingly, a three-storey single-span RCMRF equipped with the SPSW was numerically modeled, whose nonlinear behavior as well as response modification factor (R factor) were examined and then, compared with those of the bare RC frame. Based on the results obtained, it was concluded that R factor of the RC frame equipped with the SPSW (connected using the shear stud) was greater than that of the unequipped RC frame, whose value could be considered 6.5 (in the limit state).

E-ISSN: 000-000
© 2025 The Authors. Concept and Function in The Building Engineering by Ahlul Bayt International University.
How to cite this article:
B. Zahabiyoun , (2025). Application of multi-objective optimization algorithms in Continuous Streamflow Modelling of a Mountain Subcatchment, 2(4), 1-15. https://doi.org/

Introduction

As an efficient lateral load-resisting system, the steel plate shear wall (SPSW) has drawn the structural engineers' attention in recent years. The most notable characteristics of the SPSW include cost-effectiveness, convenience of installation, low weight, high ductility, great energy absorption capacity and lastly, remarkable reduction in the residual stresses developed in the structure.

Furthermore, the great response modification factor (R factor) of the SPSW helps to reduce size of the beams and columns. On the other hand, due to architectural flexibilities that the moment-resisting frames (MRFs) can provide, their use has received much attention these days. However, the MRFs undergo excessive displacements due to the laterally-induced loads (specially in the structures with more than 6 stories) for which, the shear walls have to be utilized as an auxiliary system to limit the displacements. Nevertheless, the RC shear walls generally have large dimensions and in addition to decreasing the space, increase the seismic weight of the structure. To address these issues, the SPSWs have been proposed as a practical approach but due to the insufficient insights over behavior of the RCMRFs, further studies are required.

In 2001, Chen et al. [1] performed a suite of studies on structural rehabilitation of the RC frames using the low-yield strength SPSWs. For this purpose, nine specimens were tested under the loading speeds of 2.5, 50 and 100 mm/s subjected to the incremental displacements of δy, 2δy and 3δy. The results indicated that the drift ratio of the specimens was greater than 5%, exceeding the allowable limit (2.5%). Based on the results, it was observed that the steel panel was of a considerable strength and energy absorption capacity and was not sensitive to the displacement amplitude. It was concluded that the ultimate deflection capacity of the SPSW depended on the ratio of the width to thickness of the panel. Importantly, it was understood that the rate of absorbed energy did not depend on the loading protocol, which is one of the outstanding features of the SPSWs making them behave similar to the dampers.

In another research project, Sajadi and Sabouri [2] investigated the energy absorption capacity and R factor of the stiffened SPSWs with and without opening. The tests were carried out on five specimens among which, one of them was unstiffened and the others were stiffened with and without openings. The results revealed that the R factor of the unstiffened and stiffened SPSW is 16.1 and 17.1, respectively and also, it was found that as number of the openings increases, the R factor is augmented subsequently. Additionally, it was observed that energy absorption capacity of the unstiffened SPSW is lower than that of the stiffened one by nearly 20 to 36%. Moreover, it was perceived that in the cases equipped with the stiffened and unstiffened SPSW, whole frame contributes to the energy absorption by 50 and 67%, respectively.

Han Leen et al. [3] studied the dynamic behavior of a two-storey SPSW subjected to a number of ground-motion records and managed to explore the vulnerable points in the beams and columns.

In a study conducted by Formisanov et al. [4], the issue of seismic upgrading of the existing RC structures using steel and aluminum panels was investigated. For this purpose, an RC building in a real scalewas considered. Two cyclic tests were performed after placing the panel inside the frame and the results indicated that the strength, stiffness and ductility capacity of the frame with aluminum panel is higher than that of the steel one.

Gholhaki and Sattari [5] conducted a comparative study between the RC buildings reinforced withthe SPSW that were designed based on old codes (i.e. substandard structures) and RC buildings designed based on the current codes. To this end, six-storey double-span frames (designed based on the 1st and 3rd version of the Iranian Code of Practice for Seismic Design of Structures (Standard 2800)) and a RC frame equipped with the SPSW (RC frame designed based on 1st version of standard 2800 and equipped with the SPSW) were taken into account. The results indicated that in the RC frame reinforced with the SPSW, the stress in the elements has decreased significantly and the stress concentration has majorly occurred in the steel walls. Furthermore, it was observed that adding the SPSW reduces the stress concentration in connections of the RC frame and accordingly, the load-bearing capacity of the frame has been improved. It is worthwhile to mention that use of the SPSW for strengthening the weak RC frame, enhanced the ductility factor by 13%, implying the fact that the frame equipped with the SPSW can successfully withstand the induced deflections and also, this system has a much greater energy absorption capacity compared to the weak bare RC frame.

In 2011, with the aim of enhancing the ductility and energy absorption capacity of the RC structures, Choi and Park [6] tested a structural system consisting of a RC frame and infill steel walls. These walls were subjected to a cyclic loading protocol and the results, were compared with those of a bare RC frame. After strengthening the frame with the SPSW, no shear cracks at intersection of the beam and column were observed. Due to formation of a tension zone, longitudinal cracks were developed in the beams and columns highlighting the point that the columns need to be conservatively designed. In all stories, the tension zone was developed in the steel plates and the plastic hinges generated in the plates. The plastic hinges were developed at base of the first-storey columns as well as ends of the beams in the first and second stories. At displacement of 60mm, vertical cracks in the column of first storey were generated from top of the shear studs. At a displacement of 90 mm, the cracks of the second storey columns and at a displacement of 120 mm, horizontal cracks started to form in the beams of the second and third stories at the place of the studs. During the loading process, the weld between the studs and plates were fractured and obviously, the load-bearing capacity was reduced.

In 2011, during a research conducted by Anjan et al. [7], the fundamental period of the SPSW with circular openings was obtained.

In 2011, the ultimate load-bearing capacity of semi-rigid SPSW was evaluated by Jahanpour et al [8]. According to this research, a new relationship was presented to calculate the final capacity of this system. Also, to evaluate the accuracy of the presented relationship, the results were compared with a laboratory sample.

In 2012, a numerical and laboratory study was conducted by Sabouri and Sajjadi [9] on the SPSWs with and without stiffeners. The results of the tests showed that installation of the stiffeners to the SPSW has a small effect on the shear strength of the plate, but it has a significant role on the shear stiffness and shear yield displacement. The results indicated that installation of the stiffener reduces the shear yield displacement by about 25% and increases the shear stiffness by 50%.

In 2014, Bomik [10] conducted a research on the SPSW. In this research, the seismic behavior of the SPSW with several circular openings of the same size was investigated. The diameter of the circles, positioning and meshing of the elements are also topics that were examined in this research.

In 2015, Meng et al [11] conducted similar research to the above case. In this research, they investigated the seismic behavior of the SPSW in different situations (including, different shapes and placements of openings, structural characteristics, and different stiffeners).
In 2015, Porba and Brino [12] conducted experimental studies on the SPSW. In their research, they evaluated the formation of plastic hinges in columns and beams as well as the type of failure in the structure. Moreover, the extent of displacement of members horizontally and vertically was studied.

Numerical Modeling Verification

According to the unfavorable performance of Choi and Park's experimental specimen [6] in connection of the plate to the boundary elements, it was decided that first the laboratory test was numerically modeled and after validation of the modeling, the new model of the three-story specimen with modifying the plate connection to the boundary frame was modeled and verified. The tests details and technical specifications of the experimental specimen are presented in Figure 1 and Table 1.

Table 1: Mechanical Properties of the Model studied by Choi and Park [6]

			RC Frame with SPSW	Bare RC Frame
Compressive strength (MPa)			26.4	26.4
Steel plate	Thickness (mm)		2	-
	Yield strength (Mpa)		302	-
Column	Steel rebar	Area (mm^2)	3236	3236
		Rebar percentage (%)	3.7	3.7
	Transverse rebars	Spacing (mm)	50	50
Beam	Steel rebar	Area (mm^2)	794	794
		Rebar percentage (%)	9.3	9.3
	Transverse rebars	Spacing (mm)	60	60

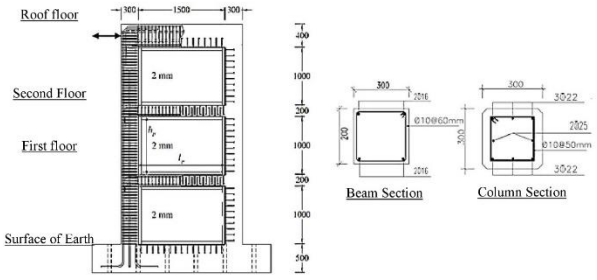

Figure 1: Geometry and Dimensions of the Specimen [6]

The lateral load was applied to the frame beam. Accordingly, the specimen was incrementally loaded until it reached ultimate displacement of 120mm.In the numerical model, the rebars and steel plates were simulated and the Poisson's ratio was set to 0.3.

To define the nonlinear material properties, the bilinear stress-strain curve of the steel with the hardening rate of 0.5% has been used. Additionally, the meshing of the models was done using regular partitioning of the components and using the S4R element, which is a 4-node element with reduced integration.

Figure 2 shows the results of the analysis of the sensitivity of load-displacement to the dimensions of meshing for three meshes with dimensions of 13, 18, and 20 cm. Due to the appropriate agreement of the dimensions of the 13 cm mesh with the test results, these dimensions were used in the analysis.

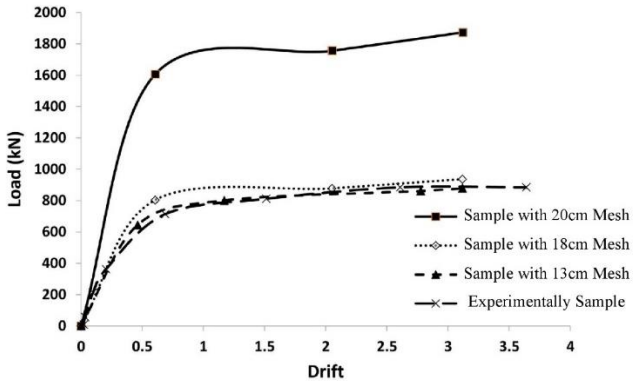

Figure 2: Results of Sensitivity Analysis to the Mesh Size

Due to the limitation of the software in starting the buckling load of thin steel plate, an initial imperfection perpendicular to the steel plate should be applied to start the buckling in the plate. Based on this, different values of the imperfection ranging from 1 to 12 mm perpendicular to the steel plate were considered, and finally, the value of 2 mm of the initial distortion was found suitable in order to model the beginning of buckling in the plate next to the 13 cm mesh. Comparison between the numerical and experimental load-displacement curves is presented in Figure 3 and as can be seen, there is a great agreement between the results.

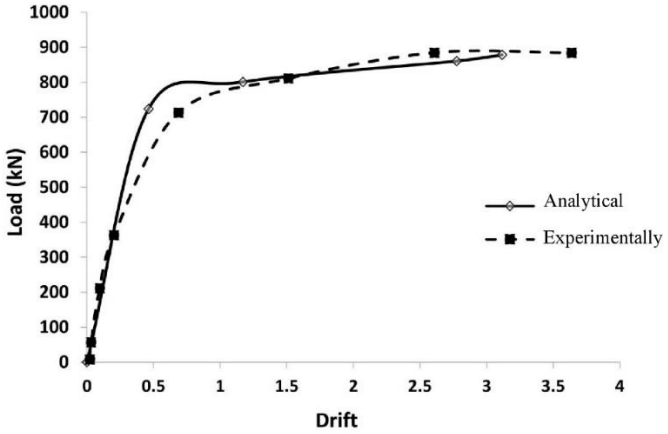

Figure 3: Comparison of Numerical and Experimental Results

Numerical Simulation of Frame and Connections

To investigate behavior of the frame and SPSW, two types of connection to the boundary frame were considered as shown in Figures 4 and 5. In the proposed approach, first, the steel plates are installed inside a frame built with the L-shaped profiles and then, connected to the RC beams and columns through continuous steel plates.

In the concreting stage, the cross-connecting plates of the beams and columns are connected to the rings that are embedded between the main stirrups. Each of these plates is considered as a face of the formwork, then the beams and columns are concreted according to the usual procedure of constructing the RC buildings. In order to connect the plate to the frame, first a frame is installed around the plate and then this frame is connected to the frame connected to the end plates. In the design of this system, the inertia moment of the columns and the thickness of the plates are determined in such a way that the column has enough stiffness so that the diagonal tension field is formed completely and the plate's bearing capacity is entirely used. Moreover, the system failure mode will be controlled by the designer. In this way, first the plate undergoes tensile yielding, then the plastic hinges are formed in the beams and the columns remain intact.

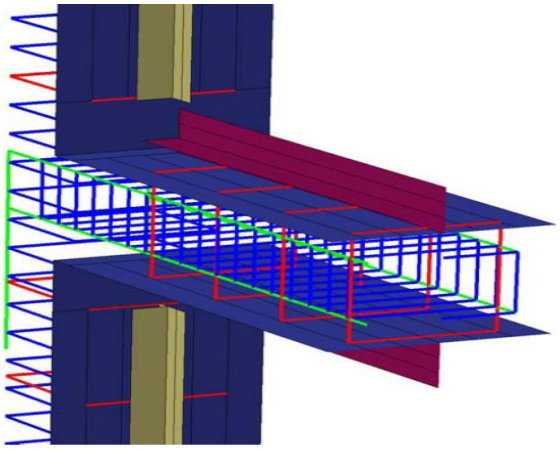

Figure 4: Connection of the Plate to the Boundary Frame in the proposed approach

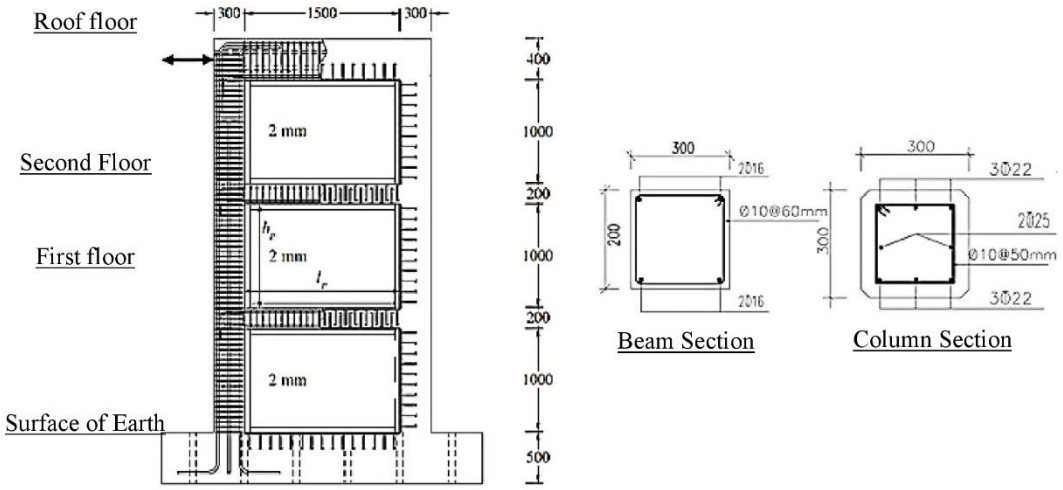

Figure 5: Connection of the Plate to the Boundary Frame in the Experimental Model

The modeled frame is the same as the experimental model. Reinforcing bars are A2 type (reinforcement used in building frames) and L-profiles are 5*50 and ST37 steel is used. Also, the plates connected to the beam and column are made of ST37 steel with a thickness of 1 cm. The middle panels with a thickness of 2 mm are modeled with ST37 and ST52 steel. The RC frames with compressive strengths of 26, 30, 40 and 50Mpa, were modeled whose properties are given in Table 2.

Table 2: Mechanical Properties

Model No.	Concrete Strength (MPa)	Steel Plate Strength (MPa)
1	26	300
2	30	300
3	40	300
4	50	300
5	26	240
6	26	360

The models were analyzed under a hypothetical displacement, where the first ruptures are created in the structure and the load-displacement diagram starts to decline. This displacement was obtained for the frame with concrete compressive strength of 50 MPa around 200 mm, but for lower concrete strengths, this value is less. Considering that in this research, the aim is to check the connections in the frame with different strengths and compare with the experimental model, displacement of about 120mm has been set as the criterion and all systems with the same displacement have been investigated and analyzed.

4. Response Modification Factor (R factor) of the RC Frame equipped with the SPSW

The response modification factor (R factor) is a parameter that converts the elastic force into the design force based on seismic codes. The R factor depends on the degree of ductility of the structure.

The R factor can be calculated according to Young's method [13]. According to this method, the R factor is obtained from equation 1:

$$R = R_{\mu} \times R_{s} \times \gamma \quad (1)$$

where R is the response modification factor, Rμ is the factor due to ductility, Rs is the overstrength factor and γ is the allowable stress factor. The overstrength factor relates the design force to the equivalent yield force of the structure. In structures, R is usually greater than one. Therefore, the structures are designed for a lower force than that imposed by completely plastic behavior.

In 1982, Newmark and Hall proposed a relationship that can be used to estimate the reduction factor due to ductility, Rμ, for elastic-perfectly plastic systems of single degree of freedom (SDOF), as follows. For fundamental periods less than 0.03s (frequencies greater than 33Hz):

$$R_\mu = 1 \qquad (2)$$

For fundamental periods between 0.12 and 0.5s (frequencies between2 and 8Hz):

(3) $R_\mu=\sqrt{(2\mu-1)}$, $\mu/R_\mu \geq 1$

For fundamental periods higher than 1s (frequencies less than 1Hz):

(4) $R_\mu=\mu$

Rμ can be estimated in interval times between 0.03 and 0.12s and also between 0.5 and 0.1s by interpolating between the limit values of the above relationships.
μ≤1 indicates elastic behavior and μ>1 indicates inelastic behavior, where μ is the degree of ductility. In order to convert the R factors to be similar to the R factors of Iran's earthquake regulations (standard 2800), the numerical allowable stress coefficient between 1.33 and 1.44 can be adopted, and in this research, this coefficient is considered equal to 1.4.
As seen in the above relationships, calculation of the value of Rμ depends on the determination of the fundamental period of the structures. For this purpose, a modal analysis was performed for the structures, the result of which was T=0.5s. As a result, the reduction factor due to ductility was calculated from equation (3).

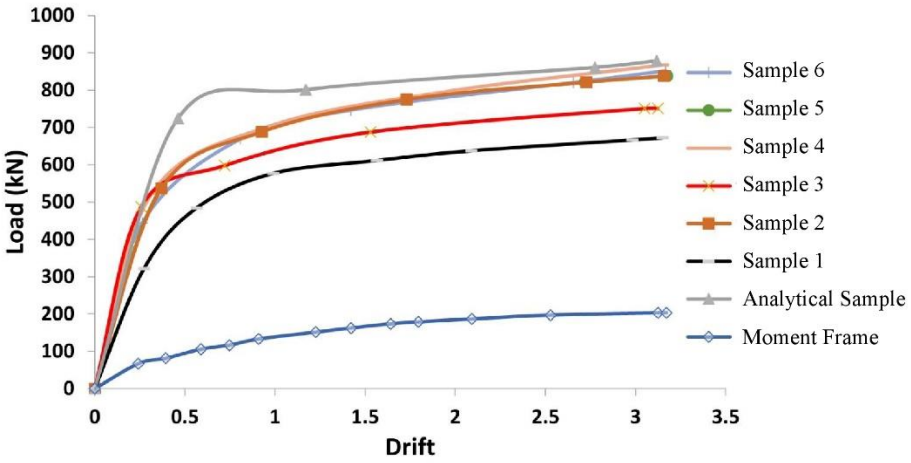

Figure 6: Load-Displacement Curves of the RC Frame and SPSW

Based on Figure 6 and according to equation 5, the R factors are given in Table 3.

Table 3: R Factor Values

Model No.	Fy(kN)	Fu(kN)	Yy(mm)	Yu(mm)	μ	Rs	R_μ	γ	R_0	R
1	403.32	672.416	15	120	8	1.66	3.87	1.4	6.42	9
2	556	837.63	16	120	8	1.52	3.87	1.4	5.77	8
3	751.038	487.131	9.8	120	12.25	1.52	4.9	1.4	7.54	10.56
4	522.771	867.365	12	120	10	1.66	4.35	1.4	7.6	10.65
5	525.998	837.63	12	120	10	1.6	4.35	1.4	7	9.75
6	550	847.63	14	120	8.57	1.54	4	1.4	6.16	8.62

In Table 3, Fu and YU are the ultimate load and displacement, Fy and YY are the yield load and displacement, μ is the coefficient of ductility, RΩ is the overstrength factor, Rμ is the factor due to the reduction of ductility, γ is the suggested allowable stress coefficient, R0 is the response modification factor of the structure and R is the factor with the application of the proposed allowable stress coefficient. A comparison between the R factors of the numerical models and the other systems is presented in Table 4.

Table 4: Comparison of the Response Modification Factors

Steel MRF	RC MRF	RC MRF + RC SW	Steel MRF + SPSW	Experimental Specimen	Specimen 1	Specimen 2	Specimen 3	Specimen 4	Specimen 5	Specimen 6
7	7	8	7	7	9	8	10.56	10.6	9.75	8.62

According to the obtained results, use of the approach of connecting the plate to additional stirrups has increased the R factor compared to the case of shear studs used in Choi and Park's test. The results of the analysis revealed that the RC frame (strength of 26 MPa) and plate (ST37 (specimen 5)) has a better R factor with a difference of 8% and the frame with plate ST52 (specimen 6) has a lower R factor than the frame with FY=300 MPa, with a difference of 4% (specimen 1). Specimen 1 at which the concrete strength is 26MPa and steel plate has a yield strength of 300MPa, offered a smaller R factor compared to specimen 5 with the same concrete strength and ST37 steel grade.

Sequence of Plastic Hinges Formation

Investigating the formation process of plastic hinges in models provides a suitable perspective to the designer regarding guided and controlled design. In the following, as an example, the sequence of forming plastic hinges according to the displacement and precedence of model number 1 has been discussed. As can be seen in Figure 7, the plastic hinges were first formed in displacement of 15 mm in the plates of the second and third stories, then in the beams and after that, in the columns.

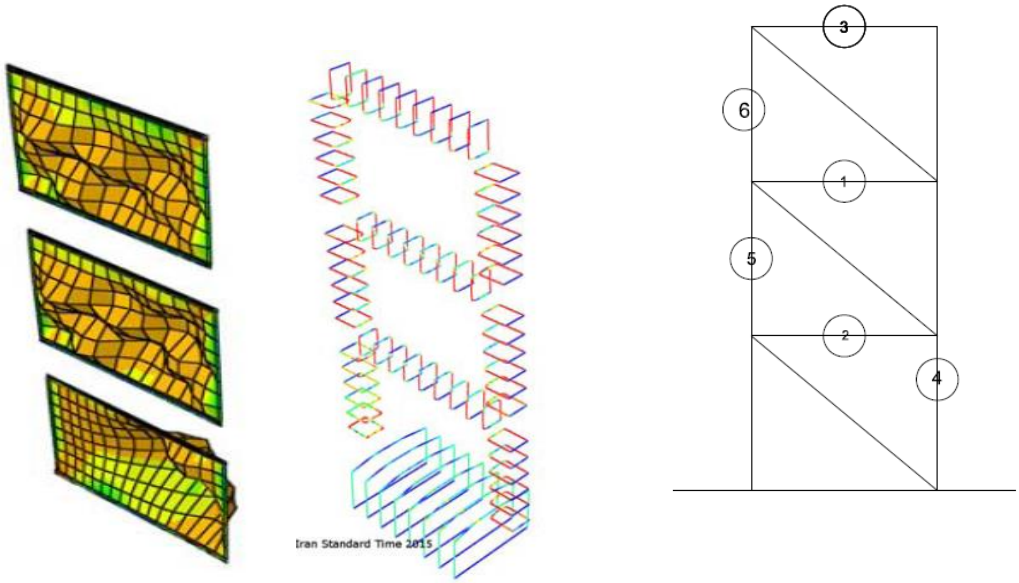

Figure 7: Sequence of Plastic Hinges Formation in Model No. 1

The first plastic hinges were formed at the ends of the beams of the first, second and third stories and at the end at the base of the columns of the first floor, which have shown much better performance than the experimental model. The beams of the first and second stories reached 24 and 30 mm displacement, and the beam of the third storey yielded at 43 mm. The columns of the first storey reached the yield stress at approximately 52 mm displacement. First, the connections were plastic hinges in the beams and then in the columns. The hinges of the beams in the displacements of 12 to 24 mm and the columns in the range of 40 to 55 mm reached the yield stress, which is almost similar to the behavior of the experimental specimen. Similar to the experimental condition, the plates in the second and third stories completely yielded to tension at a displacement of 15 mm, and after a displacement of 54 mm, the first storey's plate also yielded to tension.

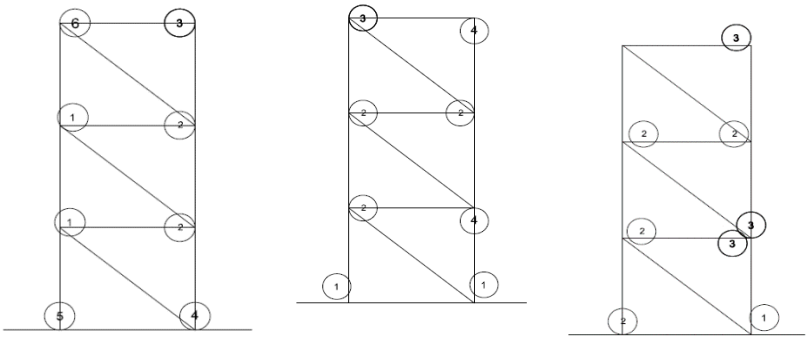

a: model 1 b: model 2 c: model 3

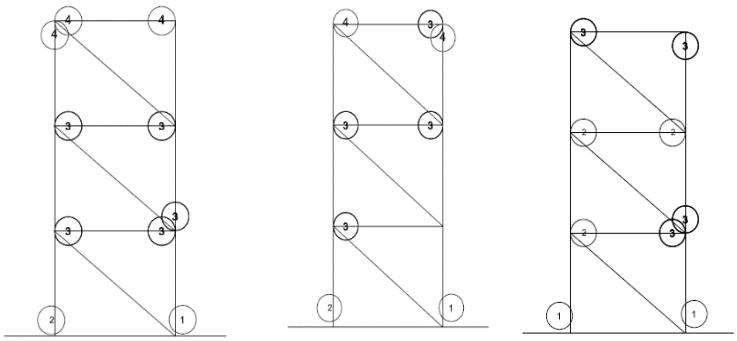

d: model 4 e: model 5 f: model 6

Figure 8: Sequence of Formation of Plastic Hinges in the Beams and Columns

Numerical Modeling of the Specimens with Various types of Connections

In this paper, the performance of four types of connections to transfer the force of the tensile field of the infill steel plate to the RC frame was investigated. The first three types of connection are used for improvement and the fourth type of connection is used for renovation. It should be noted that for the results to be comparable, the specifications of the materials, meshing, boundary conditions and the diameter of the bolts used in all the models have been chosen similar to the experimental specimen.

Details of all connections are shown in the Figure below. The specifications of connections and parametric studies carried out in each connection are as follows.

In connection type 1 shown in Figure 9 (a) and (b), instead of studs or bolts, a plate or fastener was used in the beams and U-shaped fasteners in the columns. In addition, in the inner part, a steel frame was placed and the infill steel plate was connected by an L-shaped profile. The investigated parameters in connection type 1 are different in terms of applying a continuous plate or fasteners in the beams, the thickness of the beam fasteners, and the changes in the size of the L profiles connected to the infill steel plate. Size of the L profiles is 50×5, 75×6 and 100×10mm. In other words, the ratios of the thickness of the L profile to that of the steel plate were considered 2.5, 3 and 5.

To name the specimens of connection type 1, the expression was used; that the first letter from the left represents the type of connection; the letter c represents the connection enclosed by the plate, and the rest of the letters, from left to right, represent the thickness of the column fastener, the thickness of the beam connection plate, and the angle (L-profile) size.

In the specimens that have a continuous connection plate in the beams, the letter c is placed next to the number of the thickness of the beam connection plate. In this type of connection, eight specimens were examined as shown in Figure C-9.

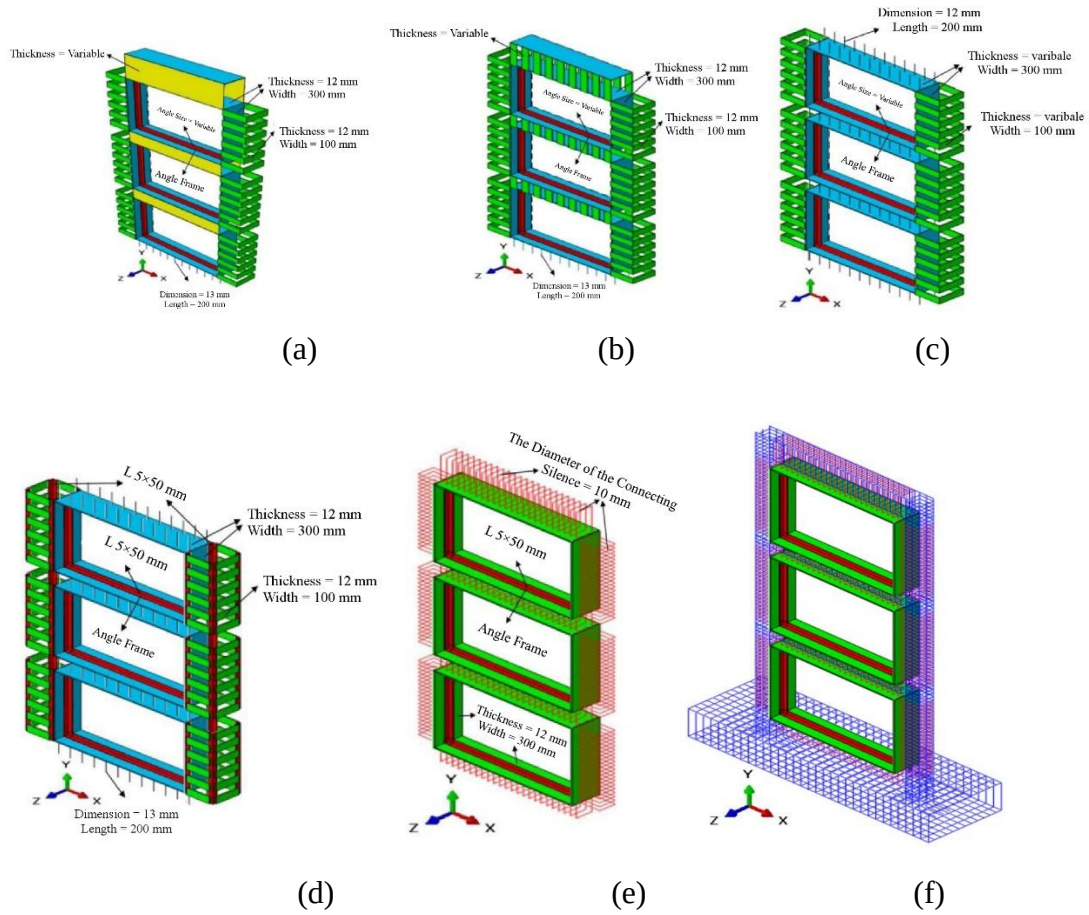

Figure 9: Details of Connections

Two rows of bolts with a length of 200 mm and a spacing of 130 mm were used in the beams, and U-shaped fasteners were used in the columns. The investigated parameters in this connection are the size of the L-shaped angle profiles connected to the infill steel plate and thickness of the connection plates. In connection type 2 specimens, first, the thickness of connection steel plates and column fasteners was chosen 12 mm as in connection type 1.

Then, for further investigation, 6mm thickness was used for connection plates and column fasteners. The specimens with 6 mm connection plates were modeled with angles of 50×50, 75×6 and 100×10 mm, i.e. the ratio of 2.5, 3 and 5. The general form of naming specimens of type 2 connections is as . In the first term, C means confinement in the column and the letter S indicates the existence of a bolt in the beam. Other letters from left to right are according to the thickness of the connection plates and the angle size. In this type of connection, four specimens were examined. Connection type 3 is similar to connection type 2, as seen in Figure 9, the only difference is that four L-shaped profiles (angles) are used in the corners of the columns. In this connection, two specimens were examined. The investigated parameters are the influence of the angles used in the column corners and the influence of the bolts used in the columns to improve the connection

performance. As seen in Figure 9, in the second specimen of this type of connection, a row of bolts is used in the columns. The length of the bolts used in the columns is equal to the sum of the dimension of the column and the thickness of the two angles' flanges, which are placed at a spacing of 310 mm. The naming of the specimens was done for the first specimen as and for the second specimen of this type of connection as . The meaning of the letter C in the first part is similar to the previous specimens, and the first S represents the bolt in the beam and the second S represents the bolt in the column, and in the second case, where the bolt is used in both the beam and the column, letter S is used twice. The following terms from left to right respectively express the thickness of the connection plates and the angle's size connected to the infill steel plate.

In the connection type 4, which is shown in Figure 9-c, additional stirrups are used to connect the plates. According to Figure 9-c, these stirrups are placed between the stirrups of beams and columns. The investigated parameters in this type of connection are spacing and yield stress of connection stirrups. Due to the fact that in this connection, additional stirrups have been used in the beams and columns; The procedure of naming the specimens is as . The first S indicates the type of connection, i.e. additional stirrups. The following expressions from left to right respectively indicate the spacing of stirrups of the beam connection, the distance of stirrups of the column connection and the yield stress of the connections stirrups.

Connections' Performance Comparison

In Figure 10, the load-displacement curves of all connection types are compared with each other. In order to avoid crowding of the graphs, the maximum values have been selected from connections type 1 and 2. As can be seen, has the highest load-resisting capacity. These results demonstrate that the details of this connection are such that it connects the steel plate to the RC frame well; but it should be noted that this connection is only used for newly-built structures.

Among the three connections that are used for retrofitting purposes, the highest strength is related to the . Then, respectively, and have higher resistance than the rest of the specimens. Due to the fact that in , bolts were used in both beams and columns, and a 50×5 mm angle was placed in the corners of the columns, however, its strength is higher than that of the specimens in which bolts were used only in the beams and the thickness of its connection plates is 6 mm. The specimen in which bolts are not used in the beam and column has a lower strength.

Moreover, these results show that under the same conditions, if instead of using four angles of 50x5 mm in the corners of the columns, an angle with size of 100x10 mm is used to connect the steel plate, a higher strength is obtained. Meanwhile, the amount of steel used in has increased by 40% compared to ; So, using angles in the corners of the column to improve performance of the RC frame with SPSW, makes the connection uneconomical.

Despite the fact that in connection type 1 specimens, thickness of the connection plates was chosen to be 12 mm, in those of the connection type 2 where the thickness of the connection plates is 6 mm, if the same angle size is used, the connection type 2 specimens show a higher strength; This increase in strength was predictable due to the failure mechanism of the specimens. and are quite similar in terms of the thickness of the connection plates and angles, but as can be seen, has a higher strength, which can be justified due to the failure mechanism and yield distribution in the infill steel plate. Due to the fact that in the connection type 1, bolts were not used in the connections

of beams and columns, but in the type 2 connection, bolts were used in the beams. Accordingly, use of the bolts has enhanced connection of the steel plate to the RC frame.

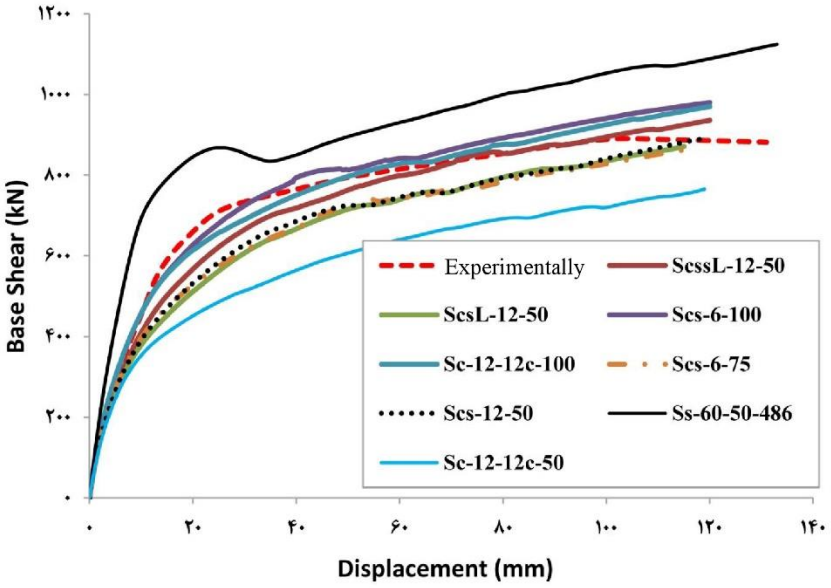

Figure 10: Comparison of the Specimens' Behavior

Conclusions

In this paper, firstly, the experimental model of a three-story RC frame with shear studs peripheral connections, which was studied by Choi and Park in 2011, was numerically modeled. The model was modeled once with a steel plate and once without it, and by comparing the load-displacement diagram obtained from the pushover analysis and the diagram obtained from the experimental data, the validity of the modeling was confirmed. Then, the experimental specimen with proposed connections (additional stirrups) was modeled. After checking and ensuring the appropriateness of its behavior, the mentioned specimen was modeled with at which, the concrete strengths varied from 30, 40 and 50MPa and two steel grades of ST37 and ST52 were utilized as well. The models were subjected to pushover nonlinear analysis and the behavioral curve of each one was obtained. Finally, the R factor, ultimate strength, and the process of forming plastic joints, as well as checking the types of connections of each model were investigated and analyzed.

The models with high strength concrete have a larger R factor than other specimens up to 52%, but the factor of this system in the general state and in the ultimate strength method can be considered 5.6, which of course requires more research.

In this system (RCMRF+SPSW), first the plates, then the beams and finally the columns will fail. This mode of failure is suitable and the stability of the frame is maintained until the end of the load-bearing capacity.

The average amount of ductility of connection type 1 (instead of studs or bolts, a continuous plate or fastener was used in the beams and U-shaped fasteners in the columns), with a continuous steel plate and fastener in the beam is 1.45 and 1.07 times, respectively, and for the type 2 connection samples (change in thickness of connecting steel plates and column fasteners), three (in the corners

of the columns, four L-shaped angles are used) and four (additional stirrups were used to connect the plates) are 1.32, 1.32 and 1.77, respectively, compared to the original concrete frame.

References

[1] Chen, Shun Tyan, et al. (2001)" Seismic Assesment and Strengthening Method ofExisting RC Buildings in Response to Code Revision", Earthquake Engeneering and Engiering Seismology.
[2] Sabouri-Ghomi, S.(2001) resistant systems against side loads, an introduction to steel plate shear wall, 1rd ed. Tehran. Angizeh publication.
[3] G, A Formisano, Matteis, De and Mazzolani, F M. (2010). 'Numerical and experimental behavior of a full-scale RC structure upgraded with steel and aluminium shear panels", Computers and Structures.
[4] gholhaki,m. sattarifar O. (2011). "behavior assessment of retrofitting reinforcement concrete frame with steel plate shear wall". 6th congress of nation of civil engineering.
[5] Choi, I. and Park, H. (2011). "Cyclic Loading Test for Reinforced Concrete Frame with Thin Steel Infill Plate" J. Struct. Eng., 137(6), 654–664.
[6] Lin, CH. Tsai, KC. Quc, B. Bruneaud, M.(2010) "Sub-structural pseudo-dynamic performance of two full-scale two-story steel plate shear walls". Journal of Constructional Steel Research. 66, 1467-1482.
[7] Anjan K. Gilbert Y. Grondin, Robert G. Driver.(2011) "Estimating fundamental periods of steel plate shear walls". Engineering Structures. 33, 1883-1893.
[8] Jahanpour, A. Moharrami, H. Aghakoochak, A.(2011) Evaluation of ultimate capacity of semi-supported steel plate shear walls. Journal of Constructional Steel Research. 67, 1022-1030.
[9] Sabouri-Ghomi, S. Asad Sajjadi, SR.(2012) "Experimental and theoretical studies of steel plate shear walls with and without stiffeners". Journal of Constructional Steel Research. 75, 152-159.
[10] Anjan K.(2014) "seismic behavior of steel plate shear walls with centrally placed circular perforations", thin-walled structures. 30-42.
[11] Wang, M. Yang, W. Shi, Y. Xu, J.(2015) "seismic behaviors of steel plate shear wall structures with construction details and materials", journal constructional steel research. 194-210.
[12] Ronny, P. Bruneau, M.(2015) "experimental investigation of steel plate shear walls in-span plastification along horizontal boundary elements", engineering structures. 68-79.
[13] Uang C.M, (1991), "Establishing R(or Rw)end Cd factors for building seis provisions", ASCE journal of structural engineering , pp19-2.